16-13-85

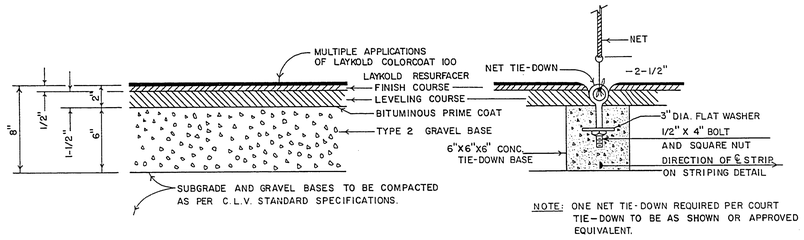

NOTE: ONE NET TIE-DOWN REQUIRED PER COURT TIE-DOWN TO BE AS SHOWN OR APPROVED EQUIVALENT.

SURFACING AND NET TIE-DOWN DETAILS

SCALE 1"= 6'

LEVELING COURSE, FINISH COURSE, RESURFACER, AND COLORCOAT APPLICATIONS ARE TO BE CHEVRON CO. LAYKOLD PRODUCTS OR APPROVED EQUALS.

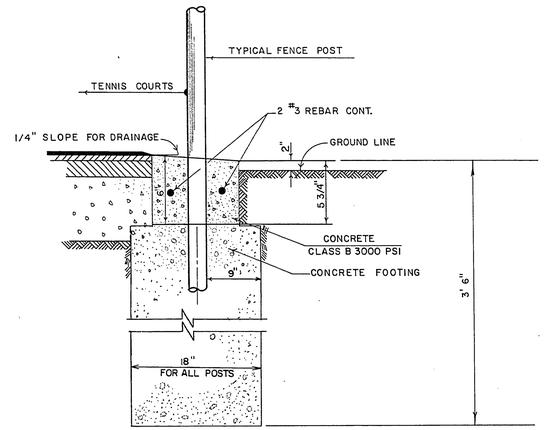

CONCRETE CURB DETAILS

SCALE 1"= 6"

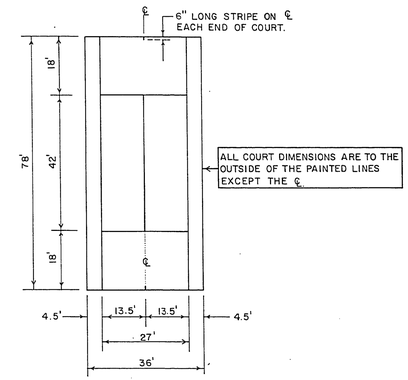

PAINT STRIPE WIDTH: 1-1/2" MIN., 2" MAX.

PAINT TYPE TO BE AS FOLLOWS: WHITE, CHEVRON ASPHALT CO. "LAYKOLD" LINE PAINT OR APPROVED EQUIVALENT.

QUANTITY IS 481 LIN. FT. PER COURT AS PER DRAWING ABOVE.

PAINT STRIPING DETAIL

SCALE: 1"= 20'

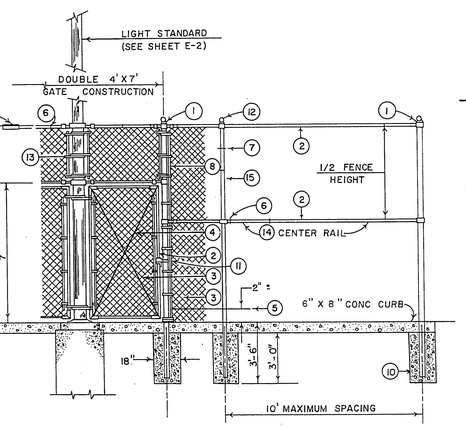

NOTE SEE SHEET C-10 FOR GATE LOCATIONS

WIDTH OF FOOTINGS FOR CORNER POSTS, GATE POSTS AND TENSION POSTS TO BE 18".

ALL FENCING, GATES, POSTS, HARDWARE, ETC. TO BE GALVANIZED AS PER SECTION NO. 715 OF THE C.L.V. STANDARD SPECIFICATIONS.

FENCE CONSTRUCTION DETAILS

NO SCALE

FENCE CONSTRUCTION NOTES

SEE SHEET C-10 FOR FENCE LOCATION, LENGTHS & GATE LOCATIONS

1. CORNER, TENSION AND GATE POSTS: 3" PIPE SCH 40
2. TOP RAIL, CENTER RAIL AND GATE FRAMES: 1-1/2" PIPE, SCH 40
3. CHAIN-LINK FABRIC 9 GAUGE, 2" MESH WIRE FABRIC TO BE INSTALLED ON COURT SIDE OF ALL POSTS.
4. DIAGONAL TRUSS RODS: 3/8" ROUND ROD, 0.376 LBS/FT.
5. TENSION WIRE 7 GA COIL-SPRING WIRE WITH FABRIC TIE WIRES ON 18" CENTERS.
6. FABRIC BANDS ON 18" CENTERS, HORIZONTAL RAILS.
7. FABRIC BANDS ON 16" CENTERS, VERTICAL POSTS.
8. STRETCHER BARS: 1/4" X 3/4" FLAT, 0.638 LBS./FT.
9. OUTSIDE, SLEEVE-TYPE COUPLING: 7" MINIMUM LENGTH SPACED ON 20' CENTERS. ONE COUPLING IN EVERY FIVE TO BE A SPRING-LOADED, EXPANSION-TYPE, COUPLING.
10. CONCRETE FOOTINGS FOR ALL POSTS: CLASS B 3000 PSI (28DAYS)
11. PEDESTRIAN GATES TO HAVE A FORK-TYPE LATCH WITH PROVISION FOR PADLOCK.
12. ALL POSTS TO BE FITTED WITH ORNAMENTAL TOPS.
13. STRETCHER BAR CLAMPS ON 16" CENTERS MAXIMUM SPACING BETWEEN STRETCHER BARS IS 100 LIN. FT. BANDS 1/8" X 3/4"
14. NOTE CENTER RAIL REQUIRED FOR ENTIRE LENGTH OF 12' FENCE
15. LINE POST: 3" PIPE, SCH 40.

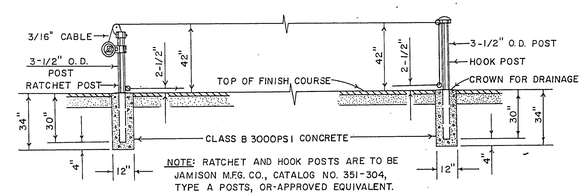

NOTE: RATCHET AND HOOK POSTS ARE TO BE JAMISON M.F.G. CO., CATALOG NO. 351-304, TYPE A POSTS, OR APPROVED EQUIVALENT.

RATCHET POST AND HOOK POST DETAILS

NO SCALE

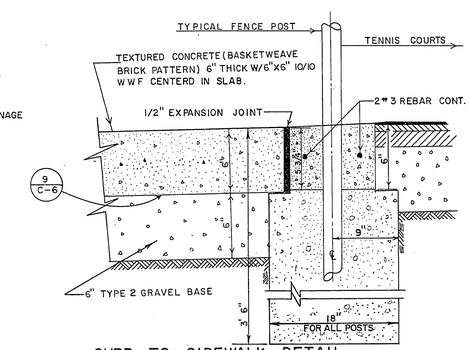

CURB TO SIDEWALK DETAIL

SCALE 1"= 6'

Revisions	Date

W.O. no. 3477

Scale (v) —

Date 1-23-79

Drawn by MARIA ESCOBAR

Scale (h) AS SHOWN

Fld. bk. no. —

Design by CHARLES KAJKOWSKI

Approved by the Director of Public Services — Date

2/6/79

Engineering Design Division

Department of Public Services

FENCE, SURFACING, CURB AND PAINTING DETAILS

BOB BASKIN PARK

CITY OF LAS VEGAS — CLARK COUNTY, NEVADA

Drawing no. 650.27-1 C/11