9-13-48

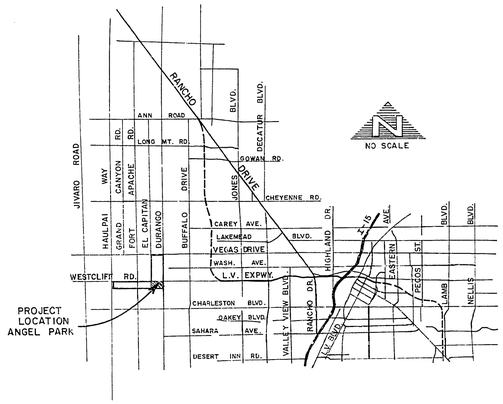

AGENCY	APPROVED DATE
Deputy City Manager	11/24/80
Director of Public Services	11/24/80
City Engineer	11/21/80
Director of Rec. & Leisure Activities	11/18/80
Chief of Engineering Division	
Quality Control	11-21-80

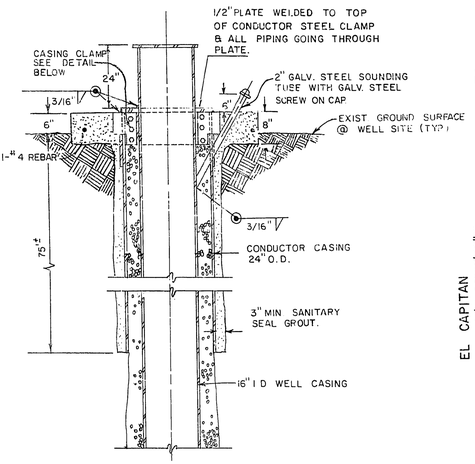

WELL SECTION
NOT TO SCALE

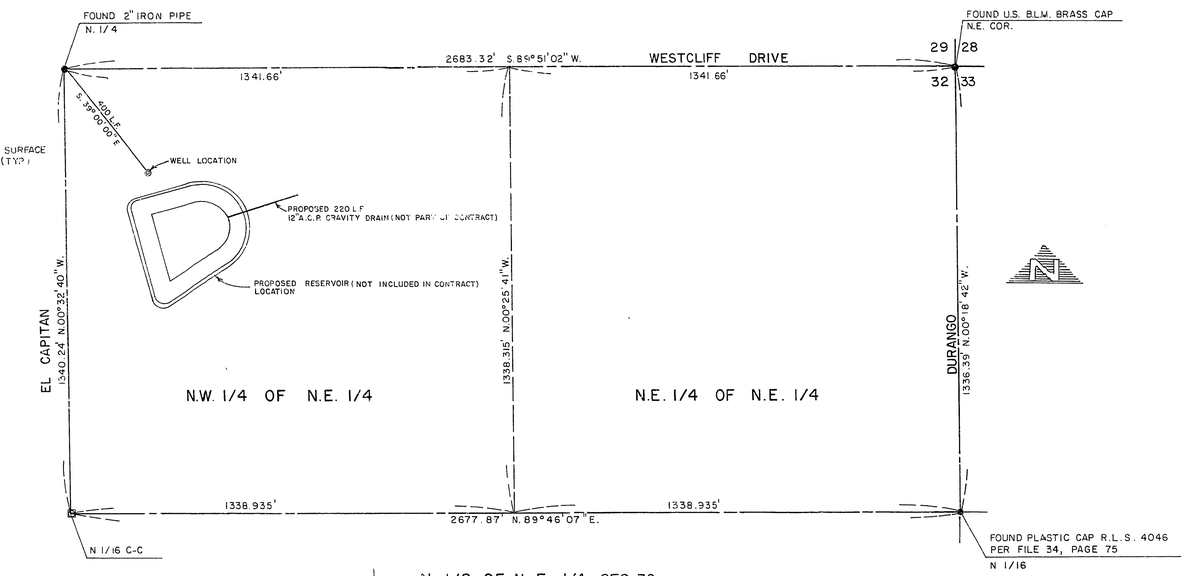

N. 1/2 OF N. E. 1/4, SEC 32
T 20S, R 60E

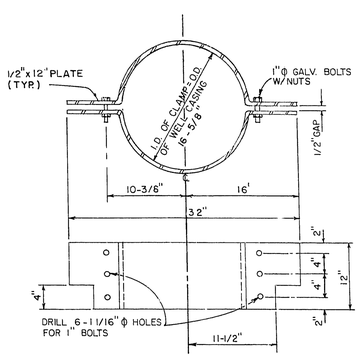

CASING CLAMP DETAIL
NOT TO SCALE

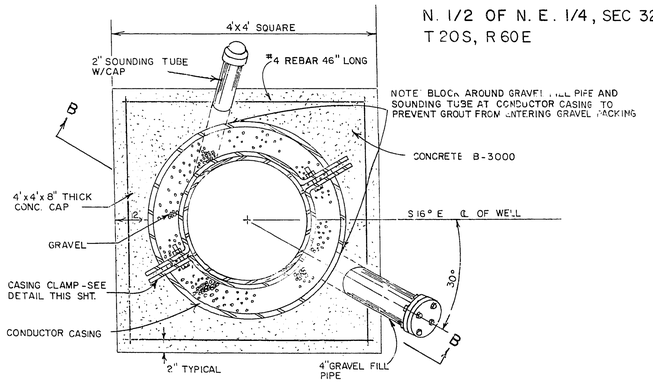

PLAN VIEW
NOT TO SCALE

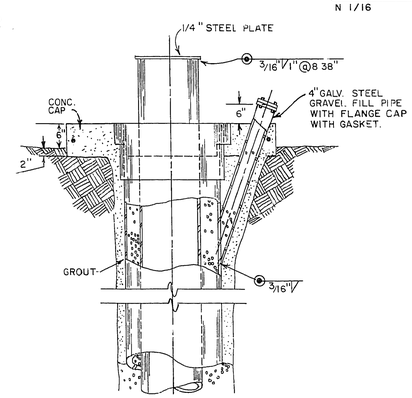

SECTION B-B
NOT TO SCALE

NOTE: TACK WELD THE CAP TO THE 2" SOUNDING TUBE IN TWO PLACES.
TACK WELD FLANGE CAP TO 4" GRAVEL FILL PIPE IN FOUR PLACES, 90° APART.

Revisions	Date

Scale (h) 1" = 200' | Scale (v) — | W.A. 2071
Fld. bk. no. NONE | Date 10-20-80 | Drawn by J. MCDOWELL
Design by D. MCGONEGLE

Department of Public Services — Engineering Design Division

N. 1/2 OF N.E. 1/4
SECTION 32
T 20S - R60E - M.D.M.

ANGEL PARK WELL

Drawing no. 650.14-V4 | 1/1

BID No. 81.3550.7