23-13-69

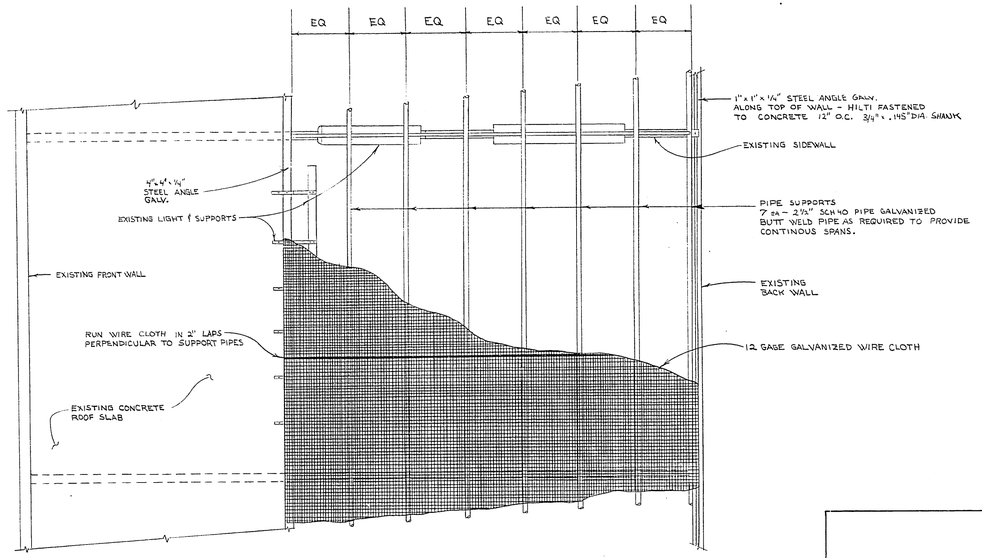

PLAN — OUTDOOR COURTS

No SCALE

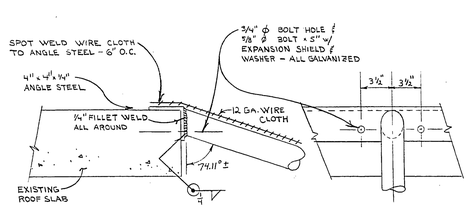

DETAIL — 1

SCALE: 1 1/2" = 1'-0"

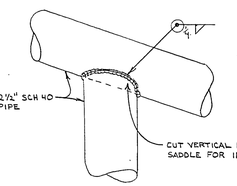

DETAIL — 2

No SCALE

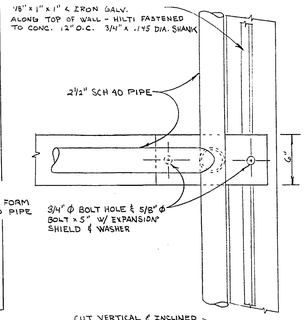

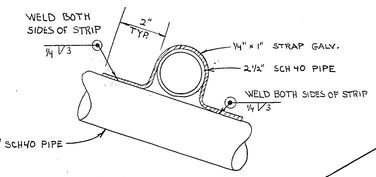

DETAIL 3

No SCALE

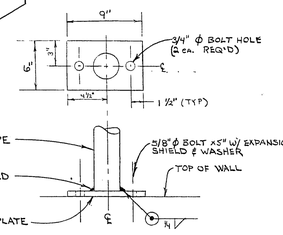

DETAIL 4

No SCALE

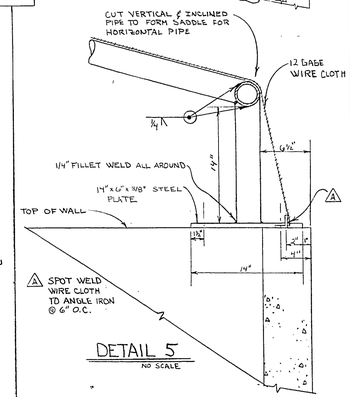

DETAIL 5

No SCALE

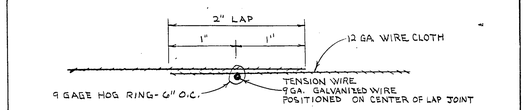

WIRE CLOTH LAP DETAIL

No SCALE

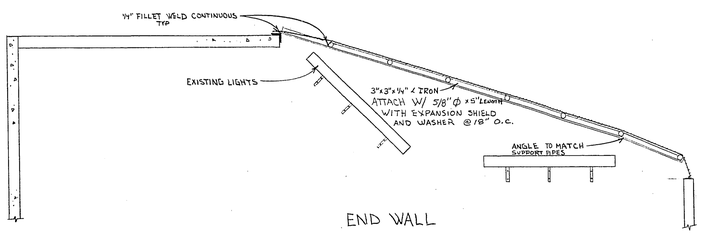

END WALL

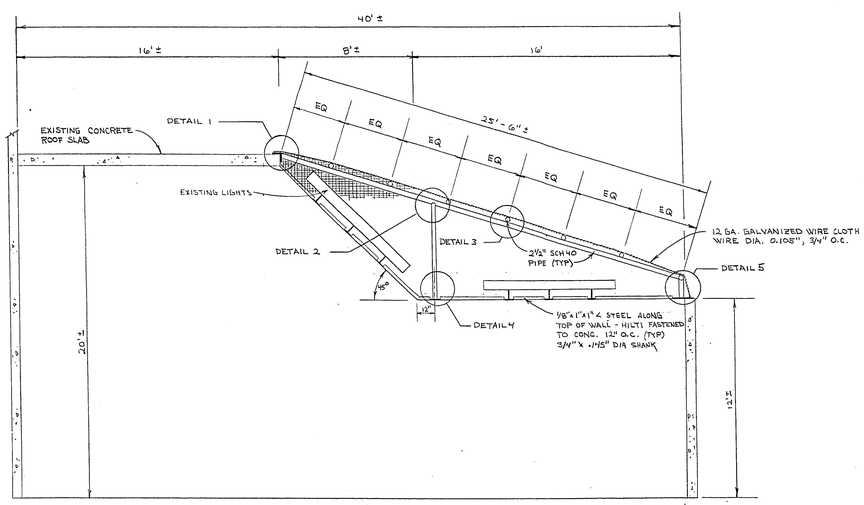

ELEVATION — OUTDOOR COURTS

No SCALE

CONSTRUCTION NOTES

1. ALL PIPE SHALL BE 2-1/2" SCHEDULE 40 GALVANIZED PIPE, CONFORMING TO ASTM A36.
2. ALL HARDWARE, STRAPS, BOLTS, ETC. SHALL BE SIZE SHOWN ON THE PLANS AND SHALL BE GALVANIZED.
3. WELDING RODS SHALL BE E-70 ELECTRODES.
4. WELDS SHALL BE OF THE SIZE AND TYPE SHOWN ON THE PLANS AND SHALL BE COMPLETE PENETRATION WELDS.
5. ALL WELDS SHALL BE CHIPPED CLEAN OF SLAG AND SCALE AND SHALL BE PAINTED WITH AN ALUMINIZED PAINT. (2 COATS) APPROVED BY THE ENGINEER
6. DIMENSIONS SHOWN ON THE PLANS ARE APPROXIMATE ONLY. CONTRACTOR SHALL FIELD VERIFY ALL DIMENSIONS NECESSARY FOR THE FABRICATION OF THIS STRUCTURE. ANY DISCREPANCIES IN THE DIMENSIONS NOTED BY THE CONTRACTOR SHALL BE BROUGHT TO THE ATTENTION OF THE ENGINEER FOR THE PURPOSE OF RESOLVING ANY CONFLICT BETWEEN THE DESIGN INTENT AND ANY EXISTING PHYSICAL CONDITIONS.
7. THE WIRE CLOTH SHALL BE 12 GAUGE AND GALVANIZED. IT SHALL BE INSTALLED FLAT AND FREE FROM BUCKLES AND DISTORTIONS. A SLIGHT TENSION SHALL BE APPLIED TO THE WIRE CLOTH FABRIC TO MINIMIZE SAGS. THE WIRE CLOTH SHALL HAVE SQUARE OPENINGS OF 3/4" x 3/4" AND BE WELDED CONSTRUCTION.
8. WIRE CLOTH INSTALLED IN A VERTICAL POSITION ON WALLS SHALL BE CUT AND FITTED AROUND LIGHT FIXTURES.
9. ADJUSTMENTS REQUIRED TO RELOCATE ELECTRICAL CONDUITS AND BOXES SHALL BE DONE BY CITY OF LAS VEGAS ELECTRICAL DIVISION. (A 48 HOUR NOTICE IS REQUIRED)
10. A SLIGHT TENSION TO MINIMIZE SAG SHALL BE APPLIED TO 9 GAGE WIRES LOCATED AT WIRE CLOTH LAPS.
11. TURN BUCKLES SHALL BE INSTALLED ON AT LEAST ONE END OF EACH 9 GAGE TENSION WIRE.

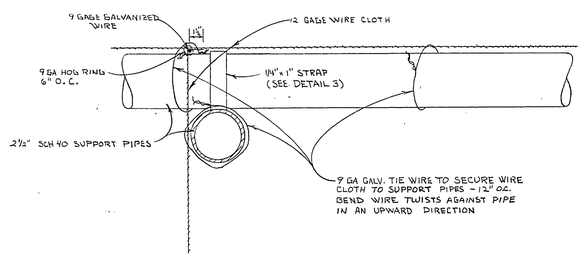

WIRE CLOTH TO SUPPORT PIPE CONNECTION — DETAIL

No SCALE

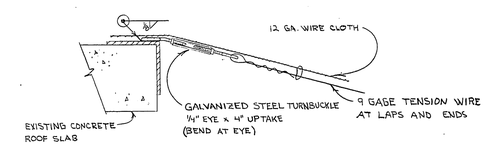

TURNBUCKLE/TENSION WIRE DETAIL

No SCALE

Revisions	Date

W.A. no. 0010

Scale (v) —

Scale (h) AS SHOWN

Date JUNE 1980

Fld. bk. no. —

Drawn by N. R. HAMP

Design by C. KAJKOWSKI, P.E.

Department of Public Services — Engineering Design Division

OUTDOOR HANDBALL COURTS ROOF ENCLOSURES CONSTRUCTION DETAILS

STEWART/MOJAVE RECREATION CENTER

Drawing no. 671-43c

2/3