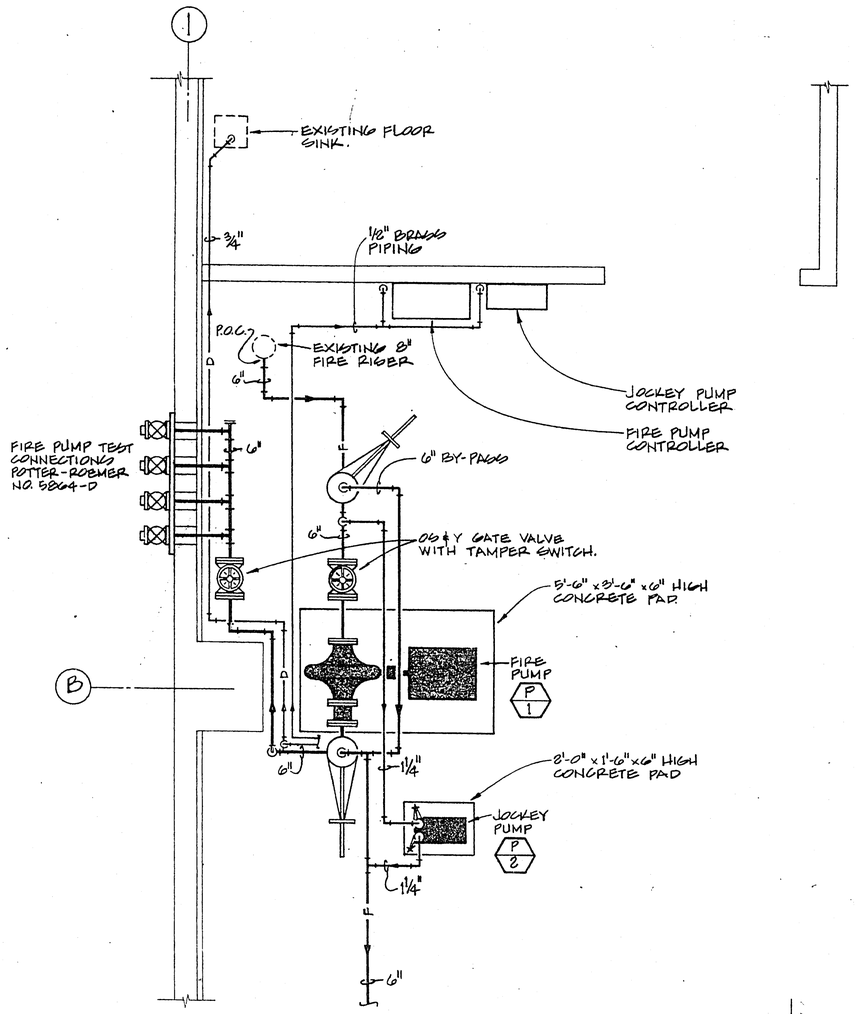

FIRE PUMP INSTALLATION

SCALE: 1/2" 1'-0"

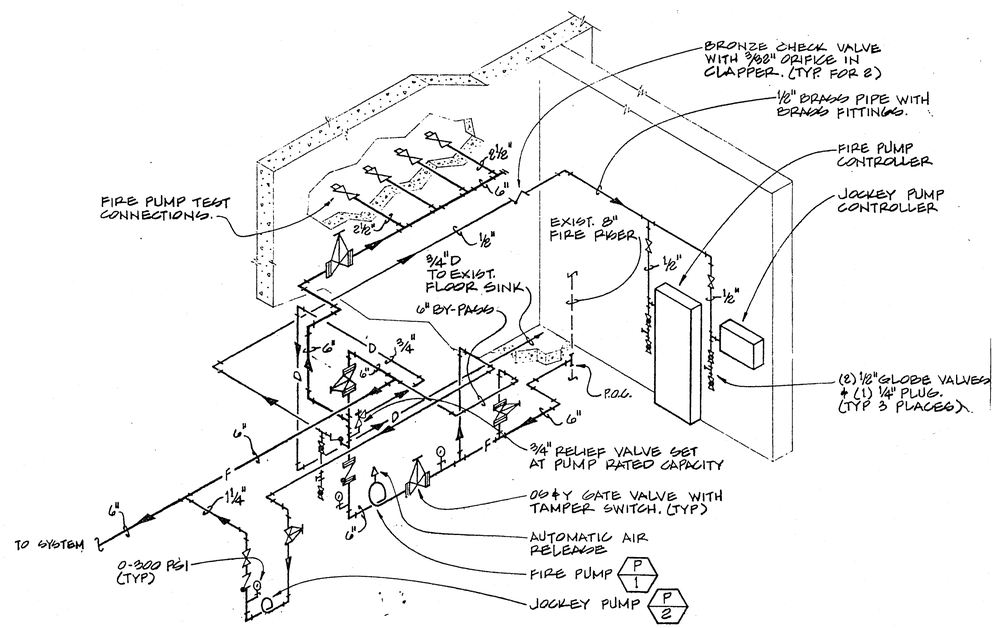

FIRE PUMP INSTALLATION - ISOMETRIC

NOT TO SCALE

DEPARTMENT OF PUBLIC WORKS
ARCHITECTURAL SERVICES

DESIGN BY:
DRAWN BY:
DATE: 10-95
SCALE:

REVISIONS
DATE

PROJECT: CITY HALL RENOVATION SIXTH FLOOR

SHEET: FIRE SPRINKLER AS-BUILT ISOMETRIC

DRAWING NO. 521-237

17/20