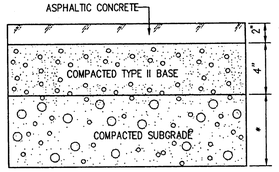

PLAYGROUND & PARKING AREA

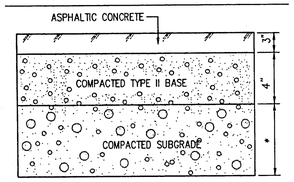

SCHOOL BUS / TRAFFIC AREA

* REFER TO GEOTECHNICAL INVESTIGATION REPORT. FOR PLACEMENT OF COMPACTED SUBGRADE

A C6.02 ONSITE A.C. PAVEMENT DETAILS

N.T.S.

NOTE: THIS SECTION IS FOR GENERAL REFERENCE ONLY. SOILS ENGINEERS REPORT TO DICTATE PAVEMENT SECTIONS.

BENCHMARK

CITY OF LAS VEGAS BENCHMARK NUMBER 2LV01-25SSSW6:
RIVET AND PLATE IN TOP OF CURB ON THE NORTHEAST RETURN OF BONANZA ROAD AND McKNIGHT STREET.
NAVD 88 DATUM
ELEVATION = 1828.30 FEET
ELEVATION = 557.266 METERS

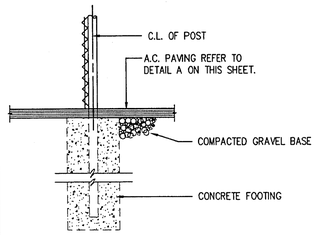

B C6.02 C.L. FENCE AT PAVING

N.T.S.

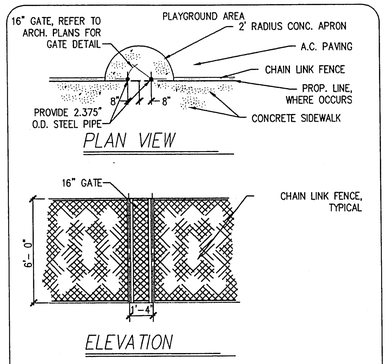

C C6.02 MAZE

N.T.S.

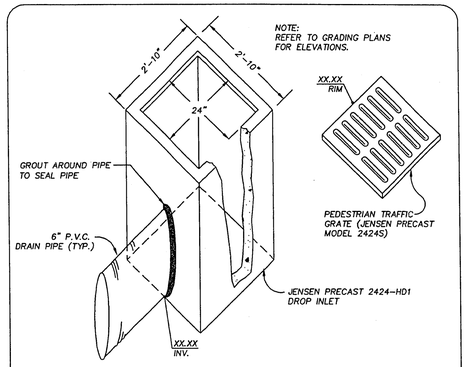

D C6.02 TYPICAL DROP INLET

N.T.S.

Avoid cutting underground utility lines. It's costly.

Call before you Dig

1-800-227-2600

REVISIONS			
REV	DESCRIPTION	DATE	BY
A	ADDED DETAIL K	6/26/96	VRH

© DOMINGO CAMBEIRO CORPORATION 1995

All designs, arrangements and plans indicated or presented by this drawing, as instruments of service, are owned by and the property of DOMINGO CAMBEIRO CORPORATION. To alter these documents for any project by anyone other than the original architect is a violation of NRS 623. The plans and/or specifications shall be restricted to the original site for which they were prepared and publication thereof is expressly limited to such use. Reproduction, publication or re-use by any method in whole or in part, is prohibited. None of such designs, arrangements or plans shall be used by or disclosed to any person, firm, agency, or corporation without the written permission of DOMINGO CAMBEIRO CORPORATION. Visual contact with these plans and specifications shall constitute prima facie evidence of acceptance of these restrictions.

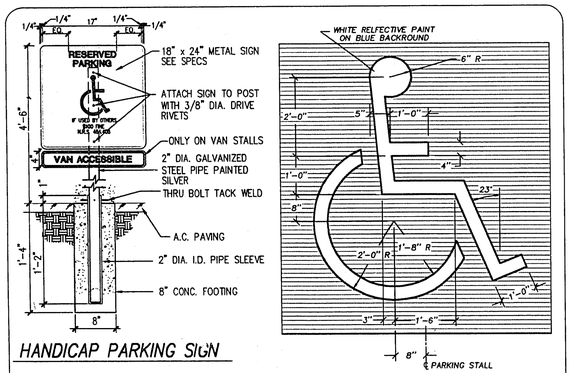

HANDICAP PARKING SIGN

E C6.02 INTERNATIONAL HANDICAP SYMBOL

N.T.S.

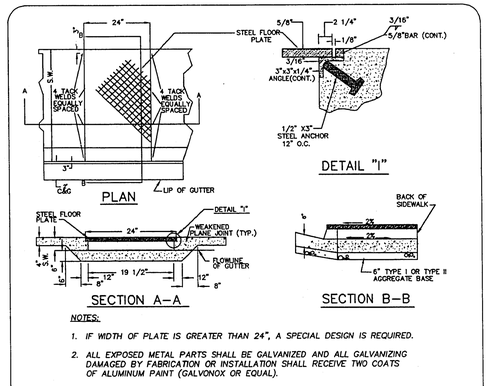

NOTES:

1. IF WIDTH OF PLATE IS GREATER THAN 24", A SPECIAL DESIGN IS REQUIRED.
2. ALL EXPOSED METAL PARTS SHALL BE GALVANIZED AND ALL GALVANIZING DAMAGED BY FABRICATION OR INSTALLATION SHALL RECEIVE TWO COATS OF ALUMINUM PAINT (GALVONOX OR EQUAL).

F C6.02 SIDEWALK DRAIN

N.T.S.

UNIFORM STANDARD DWG. No. 236

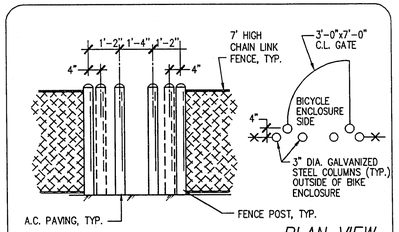

G C6.02 BICYCLE AREA ACCESS GATE

N.T.S.

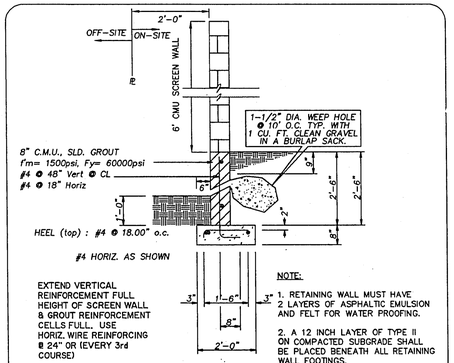

NOTE:

1. RETAINING WALL MUST HAVE 2 LAYERS OF ASPHALTIC EMULSION AND FELT FOR WATER PROOFING.
2. A 12 INCH LAYER OF TYPE II ON COMPACTED SUBGRADE SHALL BE PLACED BENEATH ALL RETAINING WALL FOOTINGS.

L C6.02 UP TO 2'-3' HIGH RETAINING WALL

N.T.S.

PROFESSIONAL ENGINEER-STATE OF NEVADA DOUGLAS R. LITTLE CIVIL No. 9930 5-2-96

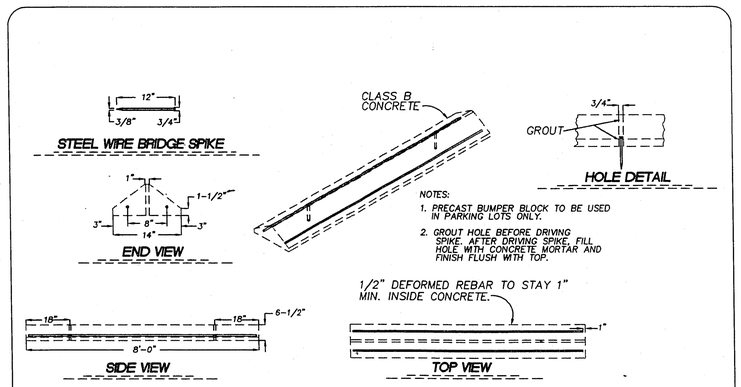

H C6.02 PARKING BUMPER

N.T.S.

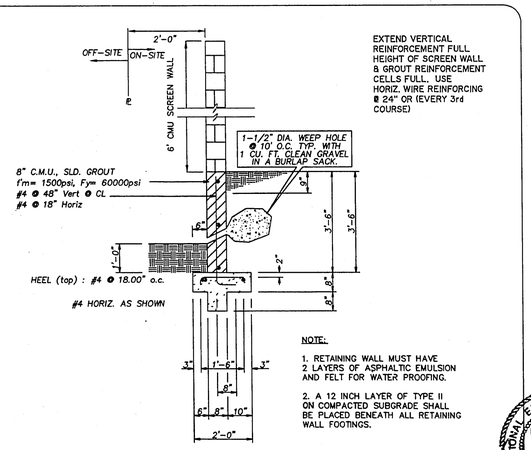

NOTE:

1. RETAINING WALL MUST HAVE 2 LAYERS OF ASPHALTIC EMULSION AND FELT FOR WATER PROOFING.
2. A 12 INCH LAYER OF TYPE II ON COMPACTED SUBGRADE SHALL BE PLACED BENEATH ALL RETAINING WALL FOOTINGS.

J C6.02 2'-6" TO 3'-6" HIGH RETAINING WALL

N.T.S.

PROFESSIONAL ENGINEER-STATE OF NEVADA DOUGLAS R. LITTLE CIVIL No. 9930 5-2-96

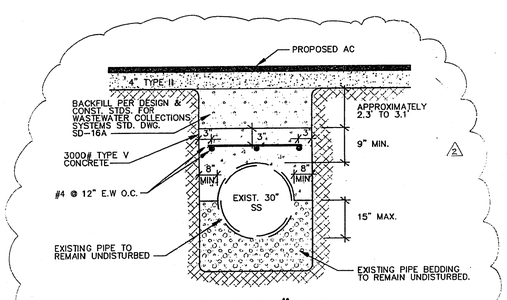

K C6.02 EXISTING 30" SS REINFORCEMENT DETAIL

N.T.S.

Domingo Cambeiro Corporation
ARCHITECTURE • ENGINEERING • PLANNING • INTERIORS
3555 PECOS-McLEOD IC. LAS VEGAS, NEVADA 89121-3805 (702) 732-0084

POST, BUCKLEY, SCHUH & JERNIGAN
801 North Green Valley Pkwy., Suite 200, Henderson, Nevada 89014
Phone (702) 564-2021
Fax (702) 565-7220
ENGINEERING · PLANNING · SURVEYING · CONSTRUCTION SERVICES

CLARK COUNTY SCHOOL DISTRICT
CONSTRUCTION MANAGEMENT
4828 PEARL ST.
LAS VEGAS, NEVADA 89121

28TH AND HARRIS ELEMENTARY SCHOOL

DETAIL SHEET

SEAL: STATE OF NEVADA · VERNON R. HARKINS · CIVIL · No. 9808 · PROFESSIONAL ENGINEER · 5-1-96

CCSD PROJECT NO.	0828
CCSD REVIEW	
APPROVED BY	
DATE	
DRAWN BY	KAW
CHECKED BY	VRH
SUBMITTAL	5/01/96
DATE	5/01/96
DCC PROJECT NO.	95252

SHEET NO. C6.02

SHEET 17 OF 17

JOB NO. 51843
FILE NO. 843DT2.DWG

715-92

C:\DWGS\843\843DT2 Tue Apr 30 15:41:09 1996 PBSJ