NOTES:
1. OHM READING TO BE 10 OR LESS.
2. IF ROD CANNOT BE DRIVEN INTO GROUND, NOTIFY OWNER'S REPRESENTATIVE OF SOIL CONDITIONS. UPON WRITTEN APPROVAL CONTRACTOR TO DRILL HOLES AND BACKFILL WITH SELECT MATERIAL AND DRIVE IN
3. PROVIDE (1/2) ONE-HALF GALLON PER HOUR EMITTER AT EACH ROD FLUSH TO GROUND.

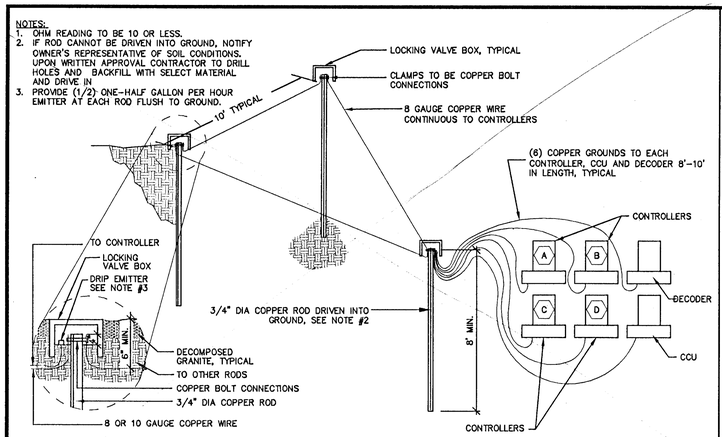

A IR-10 GROUNDING FOR IRRIGATION CONTROLLER DETAIL NTS

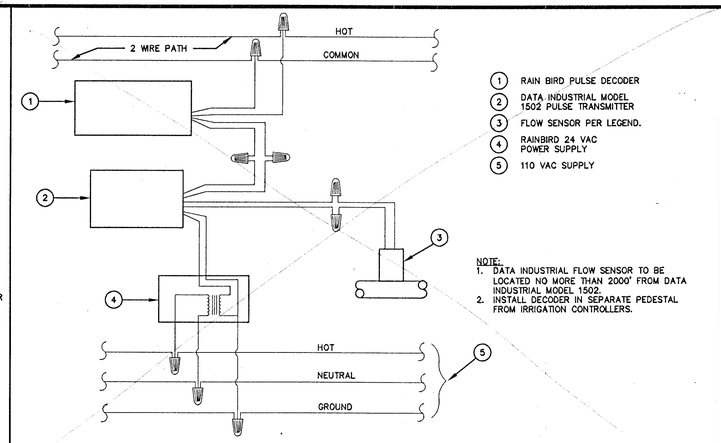

1. RAIN BIRD PULSE DECODER
2. DATA INDUSTRIAL MODEL 1502 PULSE TRANSMITTER
3. FLOW SENSOR PER LEGEND.
4. RAINBIRD 24 VAC POWER SUPPLY
5. 110 VAC SUPPLY

NOTE:
1. DATA INDUSTRIAL FLOW SENSOR TO BE LOCATED NO MORE THAN 2000' FROM DATA INDUSTRIAL MODEL 1502.
2. INSTALL DECODER IN SEPARATE PEDESTAL FROM IRRIGATION CONTROLLERS.

B IR-10 FLOW SENSOR WIRING DETAIL NTS

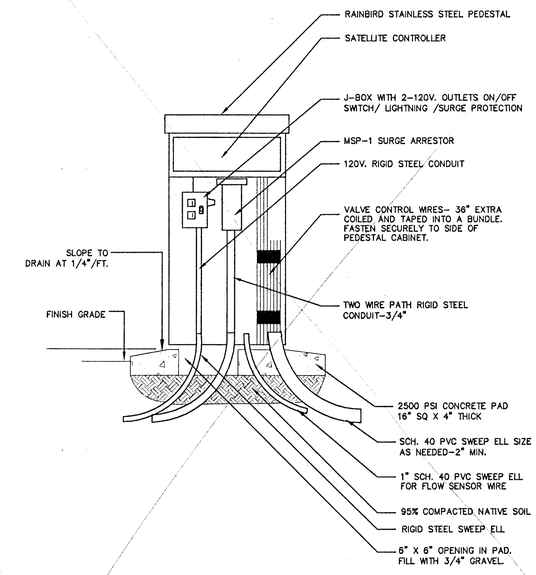

NOTE:
1. CONTRACTOR TO PROVIDE GROUND FOR SATELLITE CONTROLLER AS PER DETAIL 'A', THIS SHEET.
2. MOUNT ALL COMPONENTS WITH STAINLESS STEEL HARDWARE PER RAINBIRD RECOMMENDATIONS.

C IR-10 MAXICOM SATELLITE PEDESTAL INTERNAL LAYOUT NTS

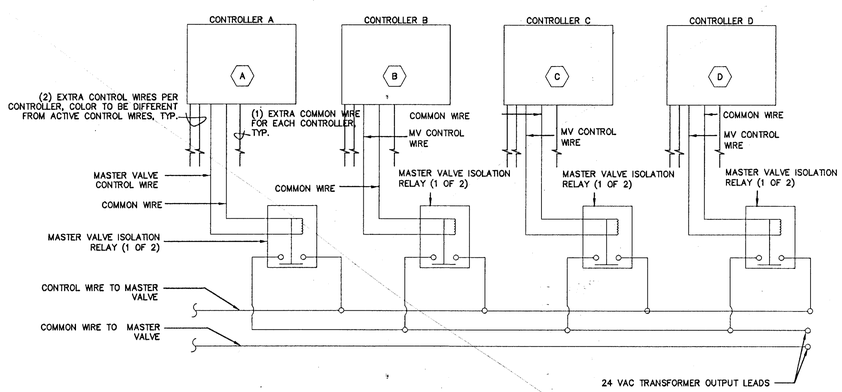

NOTES:
1. USE SPDT RELAY AND SOCKET WITH 24 VAC OPERATING COIL, DAYTON 2W925 WITH SOCKET OR EQUAL.
2. USE 40 VA TRANSFORMER WITH 120 VAC PRIMARY AND 24 VAC SECONDARY, DAYTON 3A359 OR EQUAL.
3. INSTALL RELAYS AND TRANSFORMER IN A NEMA 1 JUNCTION BOX BELOW THE CONTROLLERS.
4. LOCATE MOUNTING HARDWARE FOR CONTROLLER INSIDE IRRIGATION CONTROLLER.

D IR-10 MASTER VALVE RELAY WIRING DETAIL NTS

TAND, INC.
AS-BUILT

DATE DANIEL MEYER

know what's below Call before you dig 1-702-227-2929

SAFETY ALERT Call Before You Overhead

Call before you UnderGround 1-702-432-5300

REVISIONS | DATE

SCALE (H): NTS | SCALE (V): N/A | DATE: FEBRUARY 2010
DRAWN BY: FR | DESIGNED BY: DJC | CHECKED BY: ACP

Kimley-Horn and Associates, Inc.
Engineering, Planning, and Environmental Consultants
2080 E. Flamingo Road, Suite 210, Las Vegas, NV 89119
FAX: (702) 735-4949 PH: (702) 734-5686

© 2010

DEPARTMENT OF PUBLIC WORKS

PROJECT: BONNEVILLE/CLARK ONEWAY COUPLET PHASE 1 IMPROVEMENT PLANS

SHEET: IRRIGATION DETAILS

REGISTERED LANDSCAPE ARCHITECT 791 STATE OF NEVADA

SHEET NO. IR-10
SHEET 91 OF 91
DRAWING NO. 107V5201

BID# 09.1730.37

Apr 23, 2010 - 11:37am - USER: peter.nowowiejski
V:\LAS\Projects\LAV_PublicWorks\092250\018 Bonneville-Clark 2008\CADD\256018ir08_10.dwg

20130512