NOTE:
INSTALL CONTROLLER PER MFG. PRINTED INSTRUCTIONS & PER LOCAL CODES. EXACT LOCATION TO APPROVED IN THE FIELD BY OWNER'S REPRESENTATIVE.

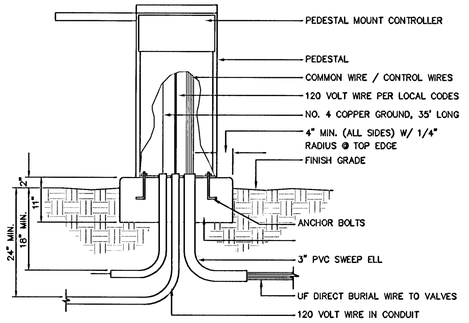

A IR-08 IRRIGATION CONTROLLER DETAIL NTS

B IR-08 NOT USED — NTS

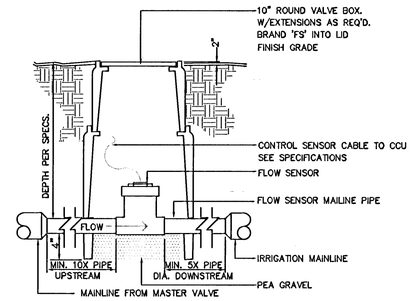

C IR-08 FLOW METER DETAIL NTS

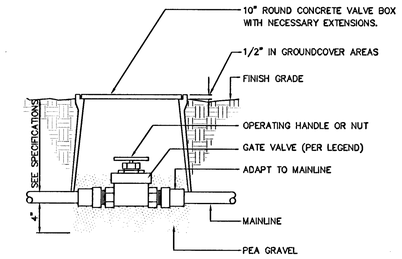

D IR-08 GATE VALVE DETAIL NTS

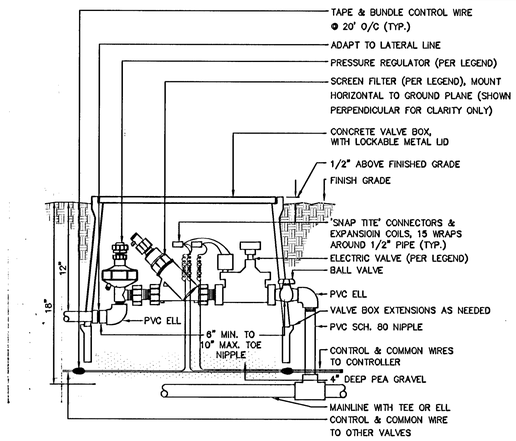

E IR-08 DRIP VALVE ASSEMBLY DETAIL NTS

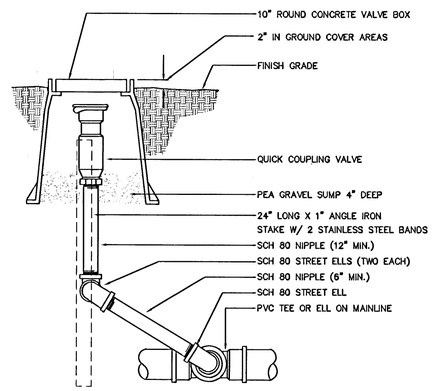

F IR-08 QUICK COUPLER DETAIL NTS

NOTE:
CONNECT ½" IPS EXCALIBER PVC HOSE TO DRIP LATERAL PVC PIPE WITH THE APPROPRIATE FITTINGS AT THE END OF ALL DRIP LATERAL RUNS.

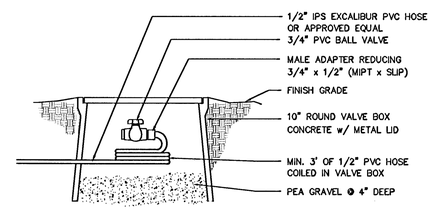

G IR-08 DRIP END BALL VALVE DETAIL NTS

NOTE: PIPE UNDER WALKS, DRIVEWAYS, STRUCTURES, ETC. ARE TO BE SLEEVED.

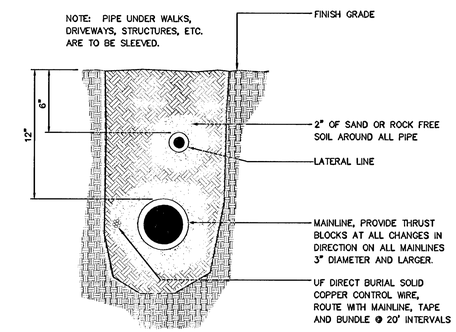

H IR-08 TRENCHING DETAIL NTS

NOTE: SLEEVE ALL PIPE AND WIRES UNDER WALKS, DRIVEWAYS, STRUCTURES, WALLS, ETC.

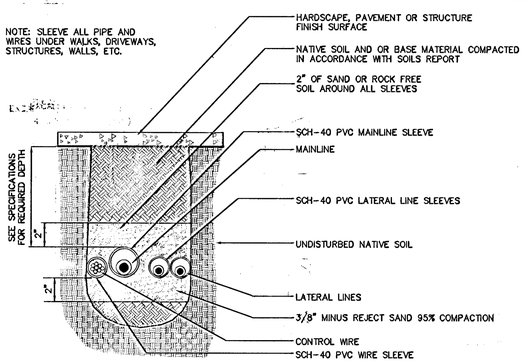

NOTE: PROVIDE HORIZONTAL CLEARANCE IN ACCORDANCE WITH SPECIFICATIONS

I IR-08 SLEEVING DETAIL NTS

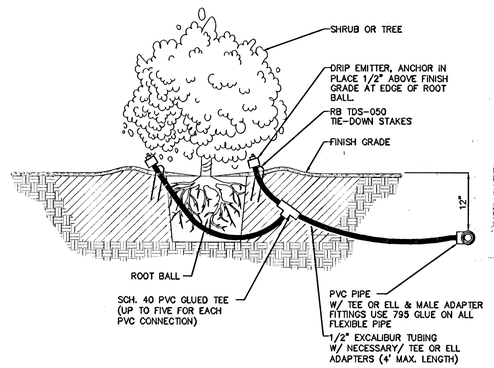

J IR-08 DRIP EMITTER DETAIL NTS

811 know what's below Call before you dig

SAFETY ALERT: Call Before You Overhead; Call before you Underground

REVISIONS	DATE

DATE: FEBRUARY 2010
CHECKED BY: ACP
© 2010

SCALE (V): N/A
DESIGNED BY: DJC

SCALE (H): NTS
DRAWN BY: FR

Kimley-Horn and Associates, Inc.
Engineering, Planning, and Environmental Consultants
2580 Corporate Road, Suite 210, Las Vegas, NV 89119
PH. (702) 724-8666 FAX (702) 735-4949

DEPARTMENT OF PUBLIC WORKS

PROJECT: BONNEVILLE/CLARK ONEWAY COUPLET PHASE 1 IMPROVEMENT PLANS

SHEET: IRRIGATION DETAILS

REGISTERED LANDSCAPE ARCHITECT FROM PENALTY OF LAW 791 Expires June 30, 2010 STATE OF NEVADA

SHEET NO. IR-08
SHEET 89 OF 91
DRAWING NO. IW5201

BID # 09-1730.37

Apr 23, 2010 – 11:36am – USER peter.mayerhofer
\\LAVFP01\Projects\LAV_PublicTrans\092256\019 Bonneville-Clark 2008\CADD\256019ir08_10.dwg

12/578